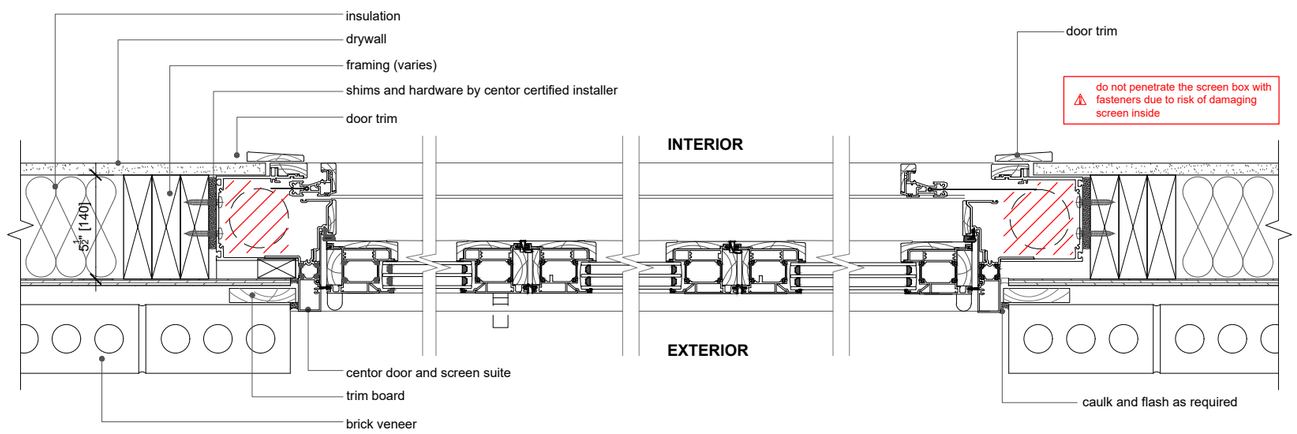

1 jamb detail plan

1 1/2"= 1'-0"

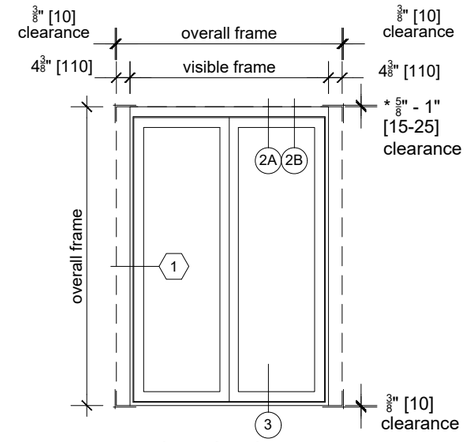

elevation key

1/4"= 1'-0"

	head fixing	
	through carrier channel	through head bracket
head clearance	5/8"	1"
sill clearance	3/8"	3/8"
jamb clearance	3/8"	3/8"

typical rough opening clearances

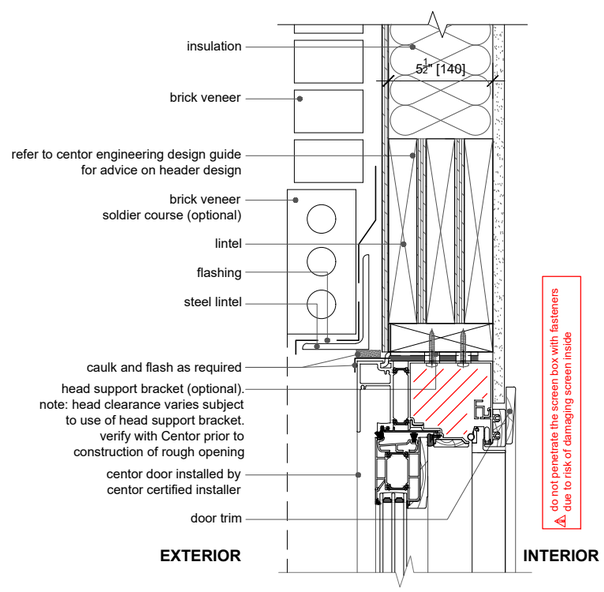

2a head detail section

1 1/2"= 1'-0"

CENTOR recommends that the advice of qualified engineer is followed for the header design of all openings particularly where the width of the opening is greater than 12 ft. Refer to CENTOR's "Engineering Design Guide" for more information.

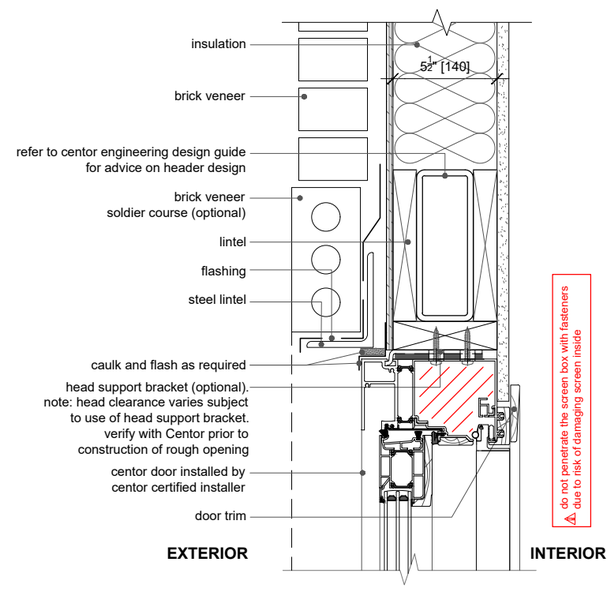

2b head detail section

1 1/2"= 1'-0"

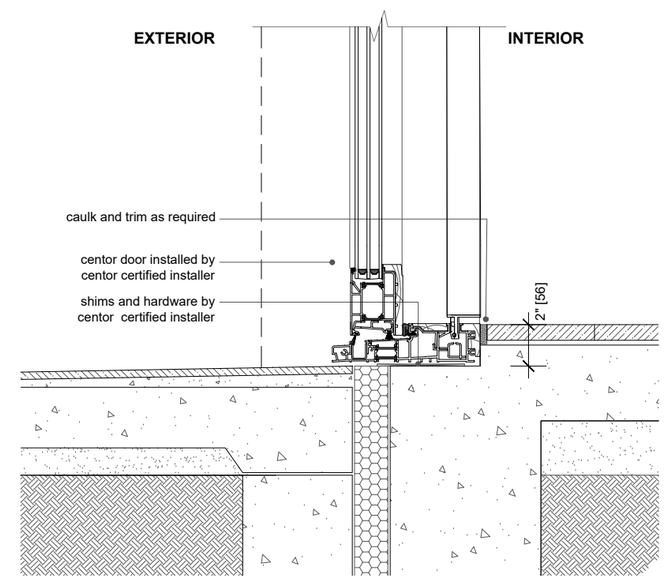

3 sill detail

1 1/2"= 1'-0"

200 Series 2x6 Brick Facade - Folding Door

Date	10 March 2022	Pages	1 of 1	Page size	tabloid
Dwg no	CD_NAM_200.03	Scale	1 1/2" = 1'-0"	Revision	D

centor

This document is copyright and remains the property of Centor North America Inc.